TEREX | FUCHS

MHL 380D

MATERIAL HANDLER

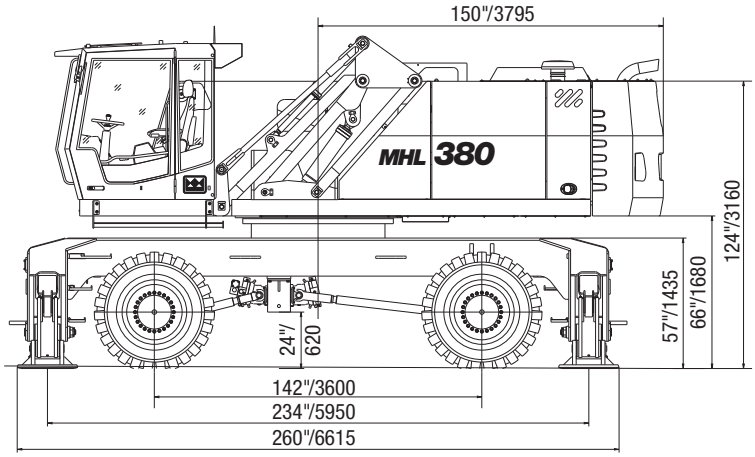

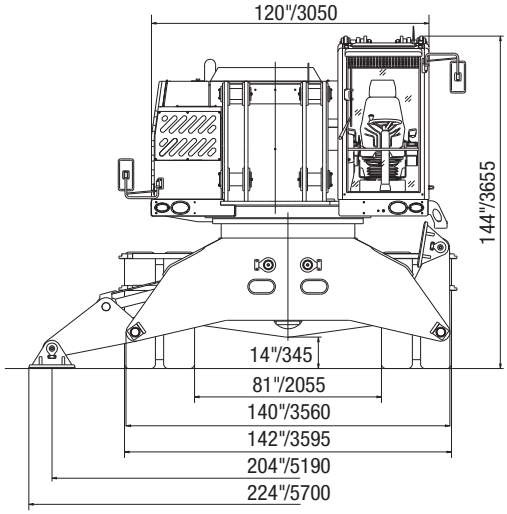

Diesel Engine

Manufacturer and type	Deutz TCD 2015 V06 4V
Design	6-cylinder turbocharged with charge air cooling
Engine output	366 HP/273 kW
Engine control	EMR III
Nominal speed	1800 rpm
Displacement	732 in³/12 L
Cooling system	Liquid cooling, thermostatically controlled and charge air cooling
Emission standards	EPA TIER III and COM III
Air filter design	Two-stage filter with safety valve
Fuel tank	230 US gal/874 L

Electrical System

Operating voltage	24 V
Batteries	2 x 12 V / 143 Ah / 950 A (accor. to EN)
Ligthing set	1 x headlight mounted to upper carriage 1 x floodlight attached to cabin floor, rear side-marker and turn signal lamps
Option	Magnet system 30 kW

Travel Drive

- Continuous hydrostatic drive with two infinitely variable axial piston motors and directly mounted travel brake valves, 4-wheel drive

Travel speed	0 - 5 mph / 0 - 8 km/h continuously adjustable
Gradeability	max. 11%
Turning radius	32' /9.9 m

Operating Weights

- **145,505 - 147,710 lbs / 66.0 - 67.0 t**

Slewing System

Ring gear	Internally toothed ring gear (double row)
Drive	2 two-stage planetary gear with integrated multi-disc brake
Upper carriage slewing speed	Infinitely variable from 0 - 6 rpm
Slewing brake	Electrically operated

Undercarriage

Front axle: Planetary drive axle with integrated drum brake, rigidly mounted, max. steering angle: 30°

Rear axle: Oscillating planetary drive rear axle with integrated drum brake and selectable oscillating axle lock

Stabilizers	4-point-stabilizers
Tires	Solid rubber, elastic tires 8-fold 14.00 -24

Brake System

Service brake	Hydraulic single-circuit braking system acting on all wheels
Parking brake	Electrically operated disc brake, acting on both front and rear axle

Hydraulic System

- Hydraulic system with load limit control and load sensing control, closed-loop swing circuit
- Seperate closed-loop slewing circuit
- Hydraulic oil filter integrated in the oil tank; maintenance interval: 3,000 operating hours
- Central lubricating system

Max. pump capacity	max. pump capacity 169 US gal/min / 640 L/min slewing circuit 53 US gal/min / 200 L/min
Max. operating pressure	4,641 psi/320 bar / 5,221 psi/360 bar
Hydraulic oil tank	182 US gal/690 L

TEREX | FUCHS

Working Diagram

MHL 380 D reach 68'9" (21.0 m)

- Work equipment: box-type boom straight 37'2" (11.35 m) , dipperstick 29'3" (8.95 m).

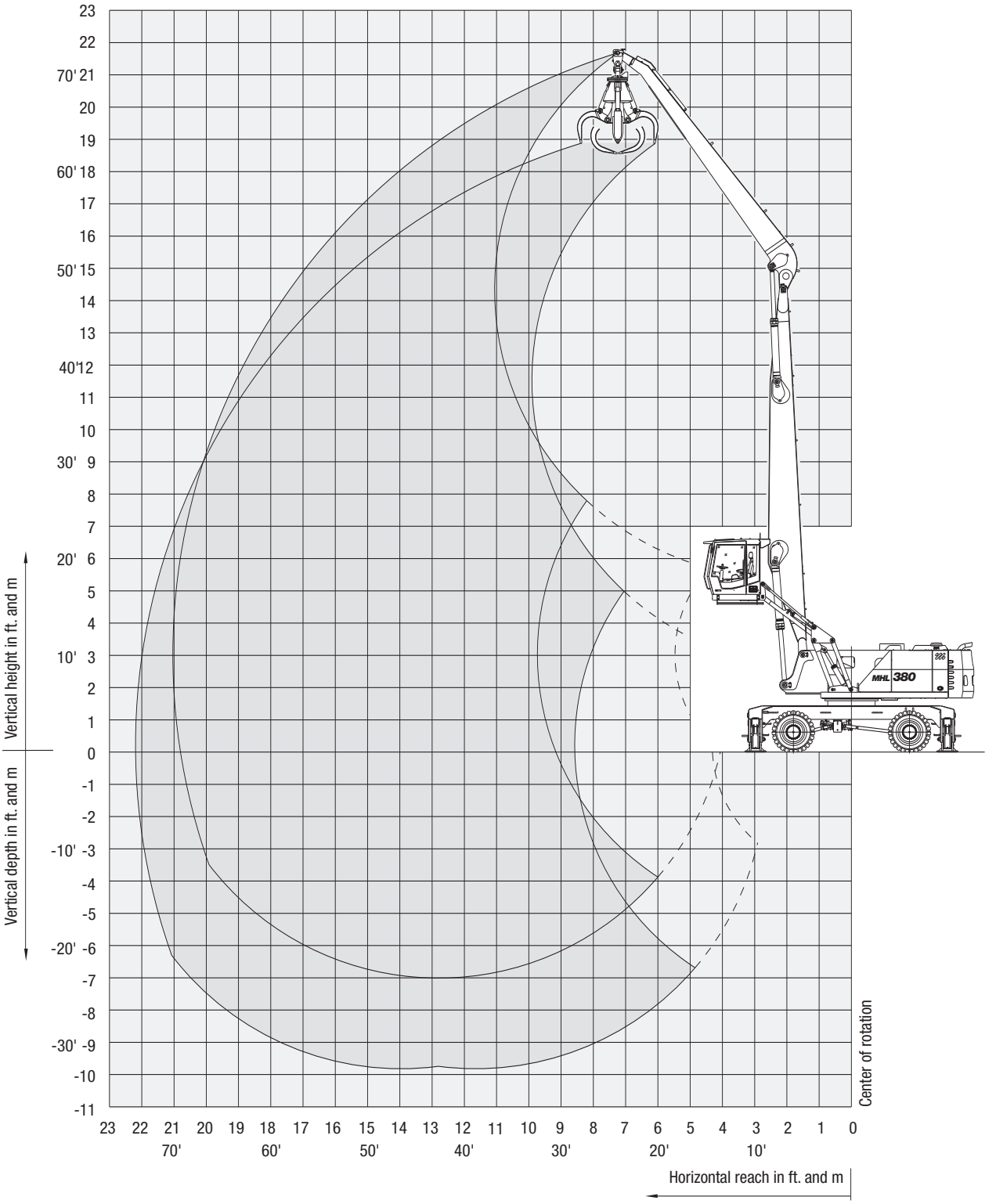

 Copyright 2008 Terex Corporation.

Lifting Capacity

MHL 380 D reach 68'9" (21.0 m)

- Work equipment: box-type boom straight 37'2" (11.35 m) , dipperstick 29'3" (8.95 m).

Height m	Undercarriage stabilizers	Reach m 6	7.5	9	10.5	12	13.5	15	16.5	18	19.5	21
19.5	non supported				(9.1*)							
	4-pt. supported				9.1* (9.1*)							
18	non supported				(10.8*)	(9.3*)	(7.1*)					
	4-pt. supported				10.8* (10.8*)	9.3* (9.3*)	7.1* (7.1*)					
16.5	non supported					(10.0*)	(8.0)	(6.5)				
	4-pt. supported					10.0* (10.0*)	9.2* (9.2*)	7.0* (7.0*)				
15	non supported					(9.9*)	(8.2)	(6.7)	(5.4)			
	4-pt. supported					9.9* (9.9*)	9.2* (9.2*)	8.6* (8.6*)	6.3* (6.3*)			
13.5	non supported					(9.9*)	(8.2)	(6.7)	(5.5)			
	4-pt. supported					9.9* (9.9*)	9.2* (9.2*)	8.6* (8.6*)	8.0* (8.0*)			
12	non supported					(10.0*)	(8.1)	(6.7)	(5.5)	(4.6)		
	4-pt. supported					10.0* (10.0*)	9.2* (9.2*)	8.6* (8.6*)	8.0 (8.0*)	7.2* (7.2*)		
10.5	non supported				(11.3*)	(9.8)	(8.0)	(6.6)	(5.5)	(4.6)	(3.8)	
	4-pt. supported				11.3* (11.3*)	10.3* (10.3*)	9.4* (9.4*)	8.7* (8.7*)	8.1* (8.1*)	7.4* (7.4*)	5.0* (5.0*)	
9	non supported				(11.8*)	(9.5)	(7.8)	(6.4)	(5.4)	(4.5)	(3.8)	
	4-pt. supported				11.8* (11.8*)	10.6* (10.6*)	9.7* (9.7*)	8.8* (8.8*)	8.2* (8.2*)	7.4 (7.5*)	6.3 (6.7*)	
7.5	non supported			(14.3*)	(11.4)	(9.1)	(7.5)	(6.2)	(5.2)	(4.4)	(3.8)	
	4-pt. supported			14.3* (14.3*)	12.5* (12.5*)	11.1* (11.1*)	9.9* (9.9*)	9.0* (9.0*)	8.3* (8.3*)	7.3 (7.6*)	6.3 (7.0*)	
6	non supported	(23.8*)	(18.2)	(13.7)	(10.8)	(8.7)	(7.2)	(6.0)	(5.1)	(4.3)	(3.7)	
	4-pt. supported	23.8* (23.8*)	18.8* (18.8*)	15.5* (15.5*)	13.2* (13.2*)	11.5* (11.5*)	10.3* (10.3*)	9.2* (9.2*)	8.2 (8.4*)	7.1 (7.7*)	6.2 (7.0*)	
4.5	non supported	(22.9)	(16.5)	(12.7)	(10.1)	(8.2)	(6.8)	(5.8)	(4.9)	(4.2)	(3.6)	
	4-pt. supported	27.7* (27.7*)	20.7* (20.7*)	19.0* (19.0*)	16.0* (16.0*)	12.0* (12.0*)	10.6* (10.6*)	9.4* (9.4*)	8.1 (8.5*)	7.0 (7.7*)	6.1 (7.0*)	
3	non supported	(12.1*)	(14.9)	(11.6)	(9.4)	(7.8)	(6.5)	(5.5)	(4.7)	(4.1)	(3.5)	(3.1)
	4-pt. supported	12.1* (12.1*)	25.4* (25.4*)	19.3 (19.3*)	15.4 (15.4*)	12.7* (12.7*)	10.6* (10.6*)	9.1 (9.6*)	7.9 (8.6*)	6.9 (7.7*)	6.1 (6.9*)	5.4* (5.4*)
1.5	non supported	(7.3*)	(13.6)	(10.8)	(8.8)	(7.3)	(6.2)	(5.3)	(4.6)	(4.0)	(3.5)	
	4-pt. supported	7.3* (7.3*)	16.2* (16.2*)	18.1 (18.1*)	14.7* (14.7*)	12.2 (12.7*)	10.3 (11.0*)	8.9 (9.7*)	7.7 (8.6*)	6.8 (7.6*)	6.0 (6.8*)	
0	non supported	(6.2*)	(11.9*)	(10.1)	(8.3)	(7.0)	(5.9)	(5.1)	(4.4)	(3.9)	(3.4)	
	4-pt. supported	6.2* (6.2*)	11.9* (11.9*)	17.6 (18.2*)	14.2 (15.0*)	11.8 (12.7*)	10.0 (11.0*)	8.6 (9.6*)	7.7 (8.5*)	6.6 (7.5*)	5.9 (6.5*)	
-1.5	non supported	(6.8*)	(11.0*)	(9.7)	(8.0)	(6.7)	(5.7)	(4.9)	(4.3)	(3.8)	(3.3)	
	4-pt. supported	6.8* (6.8*)	11.0* (11.0*)	17.1 (17.8*)	13.8 (14.8*)	11.5 (12.6*)	9.8 (10.8*)	8.5 (9.4*)	7.4 (8.3*)	6.6 (7.2*)	5.9 (6.2*)	
-3	non supported	(7.7*)	(11.2*)	(9.5)	(7.7)	(6.5)	(5.6)	(4.8)	(4.2)	(3.7)	(3.3)	
	4-pt. supported	7.7* (7.7*)	11.2* (11.2*)	16.9* (16.9*)	13.6 (14.2*)	11.3 (12.1*)	9.6 (10.5*)	8.3 (9.1*)	7.3 (7.9*)	6.5 (6.8*)	5.6* (5.6*)	
-4,5	non supported		(11.8*)	(9.4)	(7.6)	(6.4)	(5.5)	(4.8)	(4.2)	(3.7)		
	4-pt. supported		11.8* (11.8*)	15.6* (15.6*)	13.3* (13.3*)	11.2* (11.2*)	9.5 (9.8*)	8.3 (8.5*)	7.3* (7.3*)	6.1* (6.1*)		
-6	non supported			(9.4)	(7.6)	(6.4)	(5.5)	(4.8)	(4.2)			
	4-pt. supported			13.8* (13.8*)	11.9* (11.9*)	10.3* (10.3*)	8.9* (8.9*)	7.6* (7.6*)	6.4* (6.4*)			

Height ft	Undercarriage stabilizers	Reach ft. 20	25	30	35	40	45	50	55	60	65	70
65	non supported				(20,060*)							
	4-pt. supported				20,060* (20,060*)							
60	non supported				(23,800*)	(20,500*)	(15,650*)					
	4-pt. supported				23,800* (23,800*)	20,500* (20,500*)	15,650* (15,650*)					
55	non supported					(22,040*)	(17,630)	(14,330)				
	4-pt. supported					22,040* (22,040*)	20,280* (20,280*)	15,430* (15,430*)				
50	non supported					(21,820)	(18,070)	(14,770)	(11,900)			
	4-pt. supported					21,820* (21,820*)	20,280* (20,280*)	18,950* (18,950*)	13,880* (13,880*)			
45	non supported					(21,820*)	(18,070)	(14,770)	(12,120)			
	4-pt. supported					21,820* (21,820*)	20,280* (20,280*)	18,950* (18,950*)	17,630* (17,630*)			
40	non supported					(22,040*)	(17,850)	(14,770)	(12,120)	(10,140)		
	4-pt. supported					22,040* (22,040*)	20,280* (20,280*)	18,950* (18,950*)	17,630 (17,630*)	15,870* (15,870*)		
35	non supported				(24,910*)	(21,600)	(17,630)	(14,550)	(12,120)	(10,140)	(8,370)	
	4-pt. supported				24,910* (24,910*)	22,700* (22,700*)	20,720* (20,720*)	19,180* (19,180*)	17,850* (17,850*)	16,310* (16,310*)	11,020* (11,020*)	
30	non supported				(26,010*)	(20,940)	(17,190)	(14,100)	(11,900)	(9,920)	(8,370)	
	4-pt. supported				26,010* (26,010*)	23,360* (23,360*)	21,380* (21,380*)	19,400* (19,400*)	18,070* (18,070*)	16,310 (16,530*)	13,880 (14,470*)	
25	non supported			(31,520*)	(25,130)	(20,060)	(16,530)	(13,660)	(11,460)	(9,700)	(8,370)	
	4-pt. supported			31,520* (31,520*)	27,550* (27,550*)	24,470* (24,470*)	21,820* (21,820*)	19,840* (19,840*)	18,290* (18,290*)	16,090 (16,750*)	13,880 (15,430*)	
20	non supported	(52,470*)	(40,120)	(30,200)	(23,800)	(19,180)	(15,870)	(13,220)	(11,240)	(9,470)	(8,150)	
	4-pt. supported	52,470* (52,470*)	41,440* (41,440*)	34,170* (34,170*)	29,100* (29,100*)	25,350* (25,350*)	22,700* (22,700*)	20,280* (20,280*)	18,070 (18,510*)	15,650 (16,970*)	13,660 (15,430*)	
15	non supported	(50,480)	(36,370)	(27,990)	(22,260)	(18,070)	(14,990)	(12,780)	(10,800)	(9,250)	(7,930)	
	4-pt. supported	61,060* (61,060*)	45,630* (45,630*)	41,880* (41,880*)	35,270* (35,270*)	26,450* (26,4450*)	23,360* (23,360*)	20,720* (20,720*)	17,850 (18,730*)	15,430 (16,970*)	13,440 (15,430*)	
10	non supported	(26,670*)	(32,840)	(25,570)	(20,720)	(17,190)	(14,330)	(12,120)	(10,360)	(9,030)	(7,710)	(6,380)
	4-pt. supported	26,670* (26,670*)	55,990* (55,990*)	42,550 (42,550*)	33,950 (33,950*)	27,990* (27,990*)	23,360* (23,360*)	20,060 (21,160*)	17,410 (18,950*)	15,210 (16,970*)	13,440 (15,210*)	11,900* (11,900*)
5	non supported	(16,090*)	(29,980)	(23,800)	(19,400)	(16,090)	(13,660)	(11,680)	(10,140)	(8,810)	(7,710)	
	4-pt. supported	16,090* (16,090*)	35,710* (35,710*)	39,900* (39,900*)	32,400* (32,400*)	26,890 (27,990*)	22,700 (24,250*)	19,620 (21,160*)	16,970 (18,950*)	14,990 (16,750*)	13,220 (14,990*)	
0	non supported	(13,660*)	(26,230*)	(22,260)	(18,290)	(15,430)	(13,000)	(11,240)	(9,700)	(8,590)	(7,490)	
	4-pt. supported	13,660* (13,660*)	26,230* (26,230*)	38,800 (39,900*)	31,300 (33,060*)	26,010 (27,990*)	22,040 (24,250*)	18,950 (21,160*)	16,530 (18,730*)	14,550 (16,530*)	13,000 (14,330*)	
-5	non supported	(14,990*)	(24,250*)	(21,380)	(17,360)	(14,770)	(12,560)	(10,800)	(9,470)	(8,370)	(7,270)	
	4-pt. supported	14,990* (14,990*)	24,250* (24,250*)	37,690 (39,240*)	30,420 (32,620*)	25,350 (27,770*)	21,600 (23,800*)	18,730 (20,720*)	16,310 (18,290*)	14,550 (15,870*)	13,000 (13,660*)	
-10	non supported	(16,970*)	(24,690*)	(20,940)	(16,970)	(14,330)	(12,340)	(10,580)	(9,250)	(8,150)	(7,270)	
	4-pt. supported	16,970* (16,970*)	24,690* (24,690*)	37,250* (37,250*)	29,980 (31,300*)	24,910 (26,670*)	21,160 (23,140*)	18,290 (20,060*)	16,090 (17,410*)	14,330 (14,990*)	12,340* (12,340*)	
-15	non supported		(26,010*)	(20,720)	(16,750)	(14,100)	(12,120)	(10,580)	(9,250)	(8,150)		
	4-pt. supported		26,010* (26,010*)	34,390* (34,390*)	29,320* (29,320*)	24,690* (24,690*)	20,940 (21,600*)	18,290 (18,730*)	16,090* (16,090*)	13,440* (13,440*)		
-20	non supported			(20,720)	(16,750)	(14,100)	(12,120)	(10,580)	(9,250)			
	4-pt. supported			30,420* (30,420*)	26,230* (26,230*)	22,700* (22,700*)	19,620* (19,620*)	16,750* (16,750*)	14,100* (14,100*)			

Remarks

The values are stated in pounds (lbs) or metric tons (t). The pump pressure for this table is 5,221 psi (360 bar). The values amount to 75 % of the static tipping load or 87 % of the hydraulic lifting force (marked *), in accordance with ISO 10567. When the machine is standing on solid and level ground, these values apply to slewing operations through 360°. The values in brackets apply in the lengthwise direction of the undercarriage.

The values specified "non supported" only apply when the load is hoisted above the front or rear axle.

The weight of the attached load hoisting implement (quick attach, grab, magnet, load hook, etc.) must be deducted from the carrying capacity values. Load holding valves on the lift cylinders and an overload warning device are required for crane operations.

Transport dimensions on flat-bed trailer

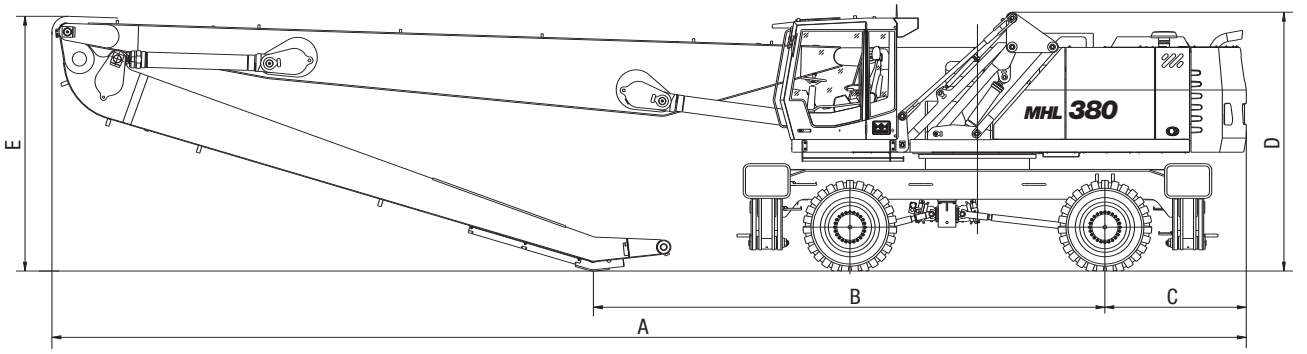

Transport Dimensions

Dimensions	Reach (work equipment)		
	60'7"/18.5 m (straight)	68'9"/21.0 m (straight)	68'9"/21.0 m (offset boom)
A	595"/15,120 mm	664"/16,865 mm	656"/16,670 mm
B	251"/6,365 mm	284"/7,225 mm	259"/6,580 mm
C	79"/1,995 mm	79"/1,995 mm	79"/1,995 mm
D	144"/3,655 mm	144"/3,655 mm	144"/3,655 mm
E	129"/3,270 mm	142"/3,600 mm	146"/3,700 mm

Grabs

- 1.3 yd^3 - 1.8 yd^3 / 1.0 m^3 - 1.4 m^3 cactus grabs (optional) with cast central case and enclosed swing drive, grab jaws with wear-resistant grab liners and tips
- Clamshell bucket (optional) according to job-site conditions

Safety Equipments

- Required when machine is used for load hook operations in compliance with EN 474-5
- Protection of cab due to work equipment operating range limit

Cab

- **Cab:** Cushioned mounted and noise insulated. Continuously variable hydraulic lift cab with max. eye level of (20') 6.2 m. Independet forward motion of (7') 2.2 m, heat-insulated panaoramic windows for excellent view, windshield can be opened. Sunshield for front and roof window, sliding window in cab door, steering column height and tilt adjustable.
- **Operator's seat:** Air-cushioned comfort-seat with integreated headrest, safety belt and lumbar support, seat-heating optional. Seat position, seat inclination and seat cushion multi-adjustable in line with position of armrests and pilot control units.
- **Steering column:** height and tilt adjustable
- Infinitely variable hot water heating with 3-speed fan, 4 adjustable defroster nozzles
- **Instruments:** Ergonomic instrument layout, glare-free. Multi-functional display. Warning and saving of deviating operating conditions, e.g. gauge for filters, pressure or hydraulic oil temperatures with safety-shutdown of pilot controls.
- **Air-conditioning:** Automatic as standard
- Up and over type front windshield with pull-down sunblind, lift-up skylight on cab roof
- **Option:** Cab with bullet-proof glass, windshield screen, auxiliary heating, radio
- Acoustic power level (guaranteed) L_{WA}= 106 dB(A)

Offical Homologation

- Certification according to CE-regulations

Effective Date: April, 2008. Product specifications and prices are subject to change without notice or obligation. The photographs and/or drawings in this document are for illustrative purposes only. Refer to the appropriate Operator's Manual for instructions on the proper use of this equipment. Failure to follow the appropriate Operator's Manual when using our equipment or to otherwise act irresponsibly may result in serious injury or death. The only warranty applicable to our equipment is the standard written warranty applicable to the particular product and sale and Terex makes no other warranty, express or implied. Products and services listed may be trademarks, service marks, or trade names of Terex Corporation and/or its subsidiaries in the USA and other countries. All rights are reserved. Terex is a registered trademark of Terex Corporation in the USA and many other countries. © 2008 Terex Corporation.

Terex Fuchs
8800 Rostin Road, Southaven, MS 38671 U.S.A.
Tel +1 (662) 393-1800 Fax +1 (662) 393-1700
Email sales@terexca.com
www.terex.com
www.terexca.com

TEREX®